ME-709-01700

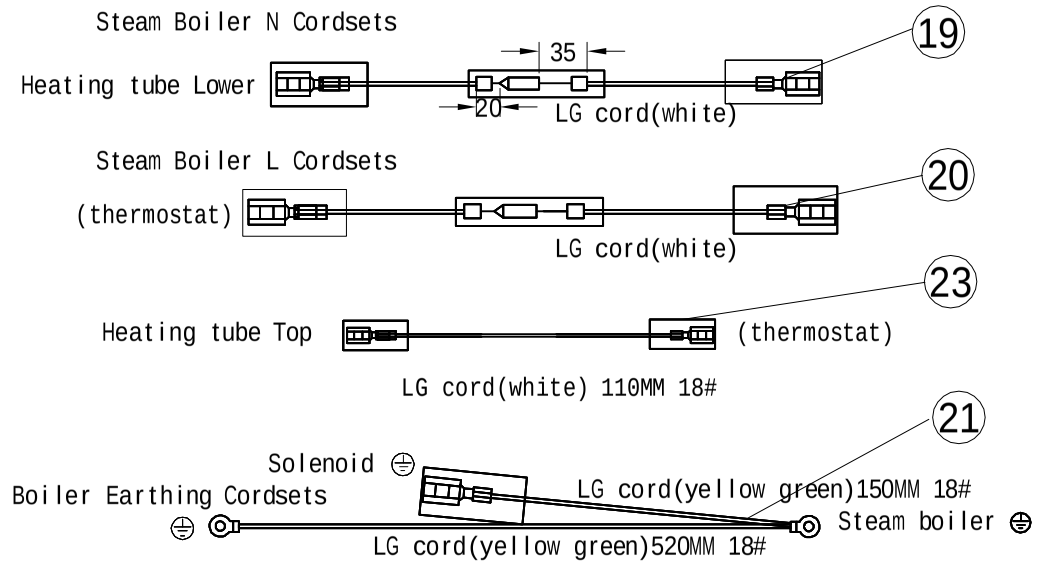

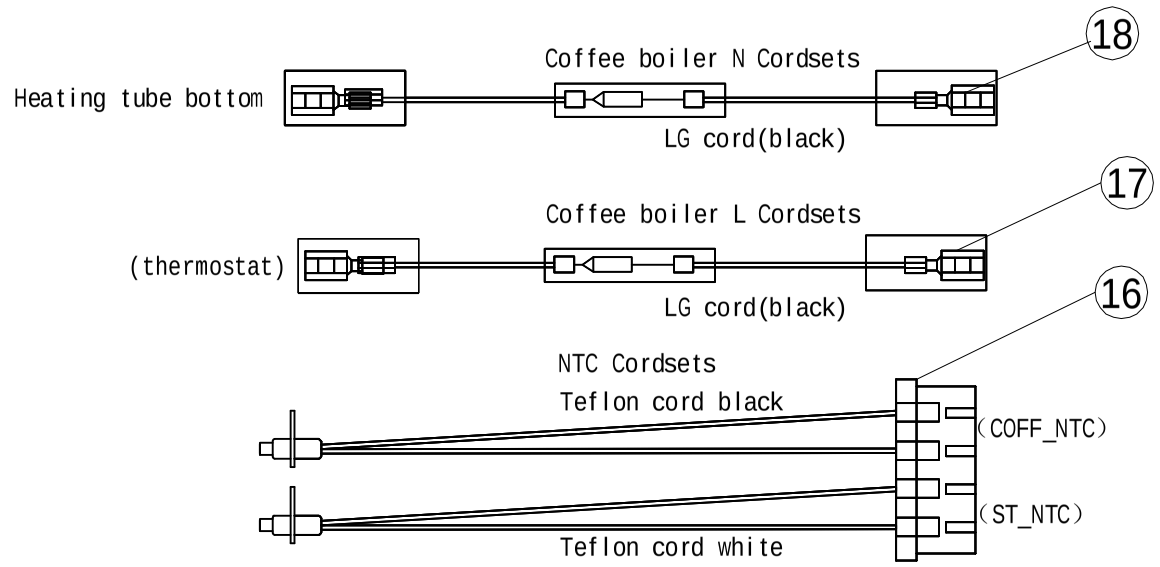

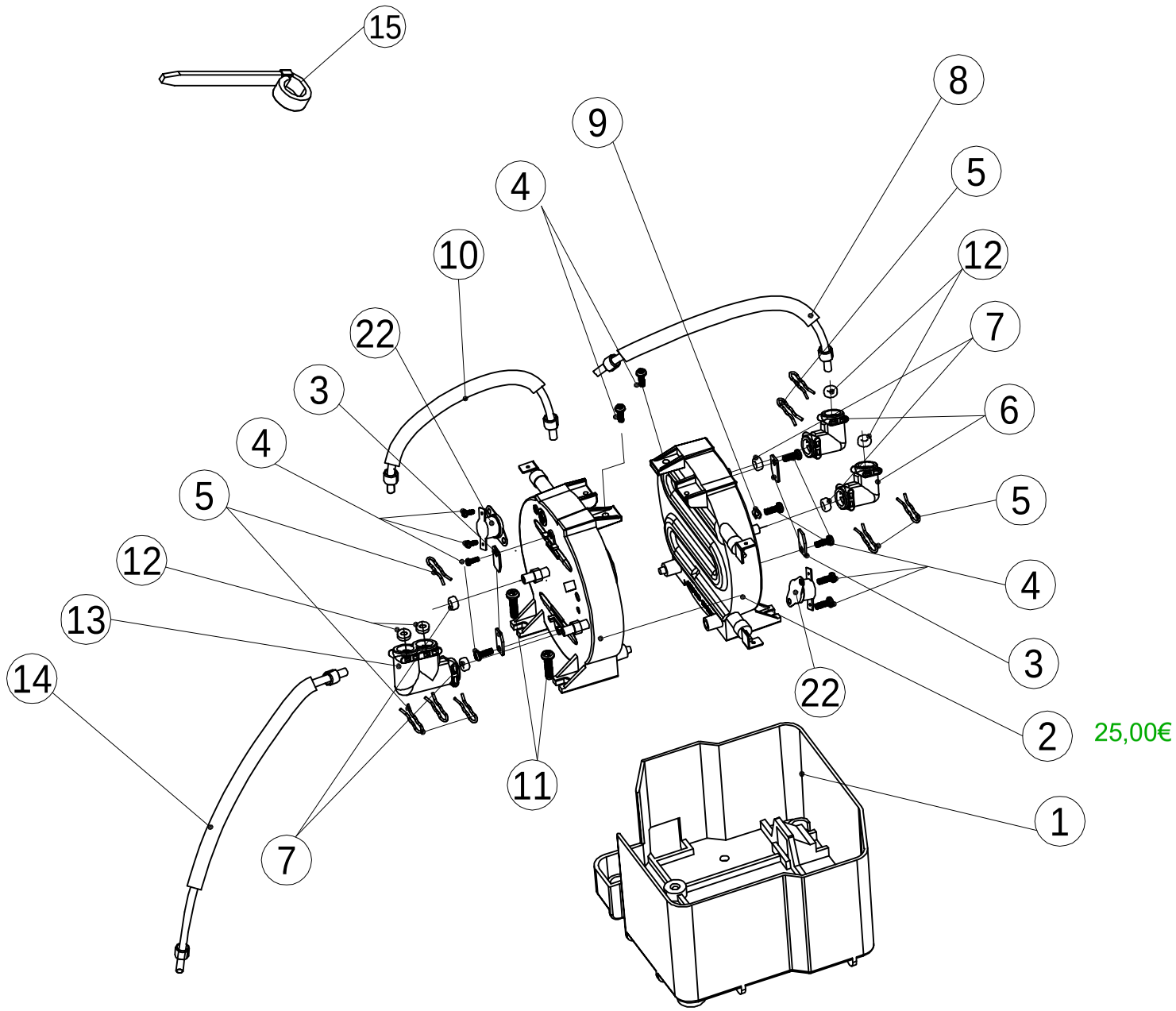

NO.	NAME	Dwg NO.	Material&Specification	Qty	Remark
23	thermostat cord(white)			2	
22	thermostat			2	
21	Boiler Earthing Cordsets	ME-709-4P015		1	
20	Steam Boiler L Cordsets	ME-708-4P010		1	
19	Steam Boiler N Cordsets	ME-708-4P011		1	
18	Coffee boiler N Cordsets	ME-708-4P013		1	
17	Coffee boiler L Cordsets	ME-708-4P012		1	
16	NTC Cordsets	ME-707-4P025		1	
15	Ties			1	
14	Teflon tube		Coffee boiler-Core inlet valve	1	
13	Three joints	ME-708-11701	PEI 1010	1	
12	Pipe buckle O-ring	ME-707-30904	High tear Silicone	4	⌀3.6X⌀7X3.7
11	Screw		+JTP 4x16 NI	2	
10	Teflon tube		Steam boiler-Coffee boiler	1	
9	Spring washer 3.0		65Mn Φ3.0	1	Earthing Line
8	Teflon tube		Steam Boiler-Solenoid Valve	1	
7	Boiler water ring	ME-707-30905	High tear Silicone	4	⌀4.6X⌀8X3.7
6	Right-angle connector	ME-708-11703	PEI 1010	2	
5	Steam Buckle 1		SUS304	8	
4	BTP3X8 Screw		#BTP3X8 SUS	13	
3	Fuse Fixed Plate	ME-707-21707	SUS430 T1.0	4	
2	Boiler Body	ME-708-21701		2	
1	Insulating sheath	ME-708-11702	PA66 A3AEG6	1	

Sign	Qty	File NO.	Signature	Date	Heating Systems	ME-709-01700			
						Edition	VIEW	Qty	SCALE
						1.0		1	1:1
						Current 1 sheet		Total 1 sheet	
Design					Auditing	Ningbo Merol Coffee Machines Co.,Ltd.			
Norm					Approve				

OUYANG A3 420X297